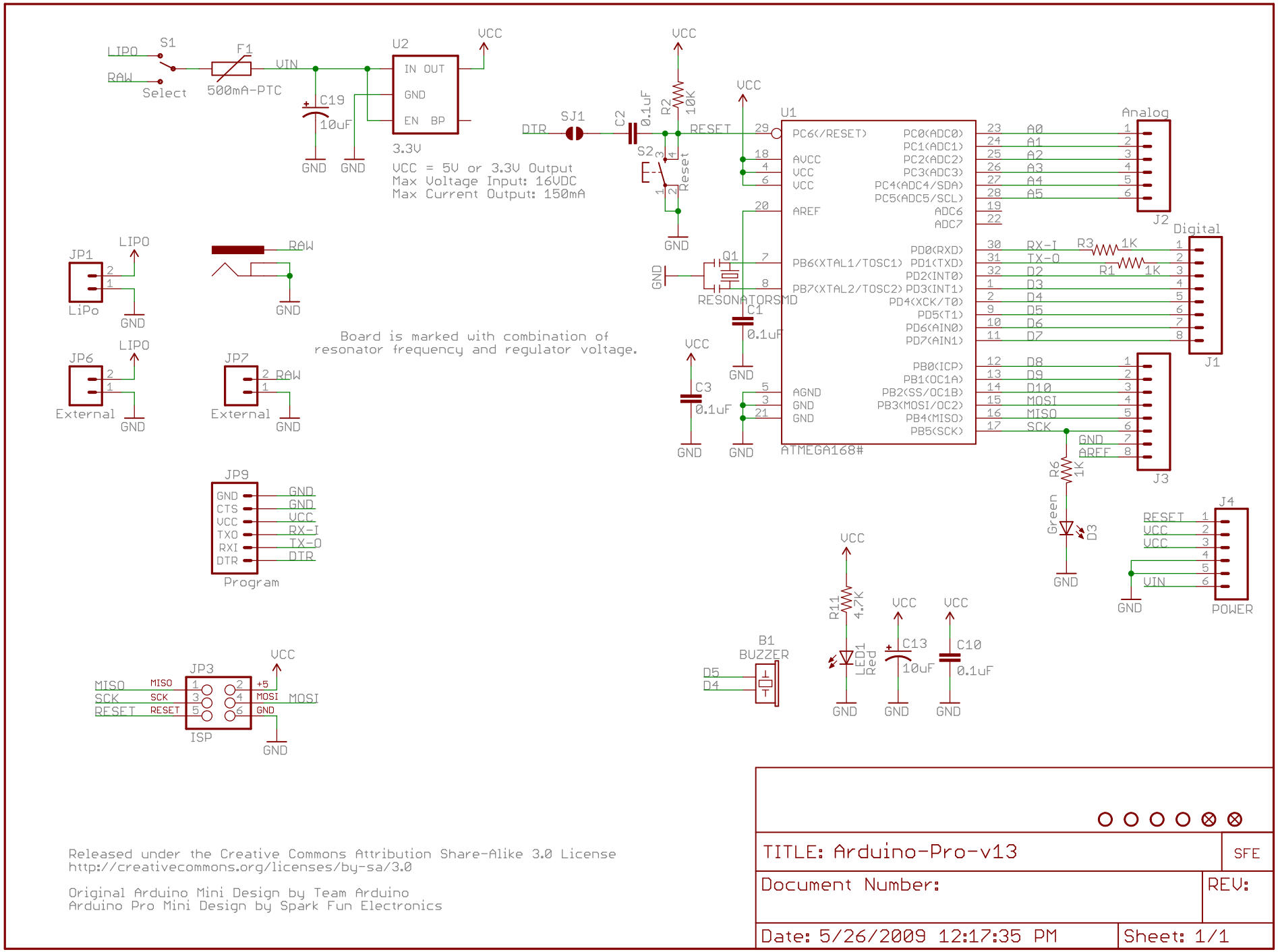

Released under the Creative Commons Attribution Share-Alike 3.0 License
http://creativecommons.org/licenses/by-sa/3.0

Original Arduino Mini Design by Team Arduino
Arduino Pro Mini Design by Spark Fun Electronics